VERSA-LINE

Submittal

JVA-E / JVB-E
Versa-Line
Copper/Aluminum and
Steel Element Ratings

☐ **JVA Slip Jointed Enclosure**

Specification

☐ **JVB Slip Jointed Enclosure**

ENCLOSURE:

STYLE: Flat Top, Top Outlet
OUTLET: Stamped Louvers
Pencil Proof

LENGTHS: 2'0" thru 8'0" in 6" Increments
MAT'L:
☐ 18 Ga. CRS (Std)
☐ 16 Ga. CRS (Opt'l)
☐ 14 Ga. CRS (Opt'l)
☐ 18 Ga. Stainless Steel (Opt'l)
☐ 16 Ga. Stainless Steel (Opt'l)
☐ 14 Ga. Stainless Steel (Opt'l)
☐ 16 Ga. Aluminum (Opt'l)
☐ 14 Ga. Aluminum (Opt'l)
☐ 12 Ga. Aluminum (Opt'l)
HEIGHT:
☐ 5 ¾" (JVA only)
☐ 6 1/8" (JVB only)
☐ 11 3/4" (JVA only)
☐ 12 1/8" (JVB only)
FINISH:
☐ Baked Powder (Std)
☐ Baked Metallic (Opt'l)

ELEMENT:

TYPE: ☐ Cu/AL (Mechanically Expanded)
LENGTHS: 2'0" thru 12'6" in 1" Increments
for 1" & 1-1/4" Cu.
2'0" thru 8'0" in 1" Increments
for 3/4" Cu.

One End Flared (Std)

TYPE: ☐ IPS Steel (Mechanically Expanded)
LENGTHS: 2'0" thru 12'6" in 1" Increments
☐ NPT Thread both Ends (Std)
☐ Beveled Ends for Field Weld (Opt'l)

See Catalog for Working Pressures

BACKPLATE:

TYPE: ☐ Partial B/P
LENGTHS: 8'0" Only
MAT'L:
☐ 20 Ga. Prepainted (Std)
☐ 18 Ga. Galvannealed (Opt'l)

AIRSEAL:

☐ 1/8" x 3/8" Closed Cell (Opt'l)

BRACKETS:

☐ Water Brkt w/B.B.
☐ BBhgr-Wall for 2nd Tier

DAMPER: Not Available

Not recommended for steam applications.
Consult factory

ACCESSORIES:

☐ JV Overlapping Type
All accessories return to the wall at the bottom and have pre-punched holes for fastening to the wall.

☐ JVA-E5 11

ELEMENT TUBE SIZE	FIN SIZE HEIGHT x WIDTH	CRADLE NUMBER	A
3/4 COPPER	3 1/4 x 3 1/4	2	7"
1" COPPER	3 1/4 x 3 1/4	2	7 3/16
1 1/4 COPPER	3 1/4 x 3 1/4	1	6 5/8
1" STEEL	3 1/4 x 3 1/4	2	7 5/16
1 1/4 STEEL	3 1/4 x 3 1/4	1	6 13/16

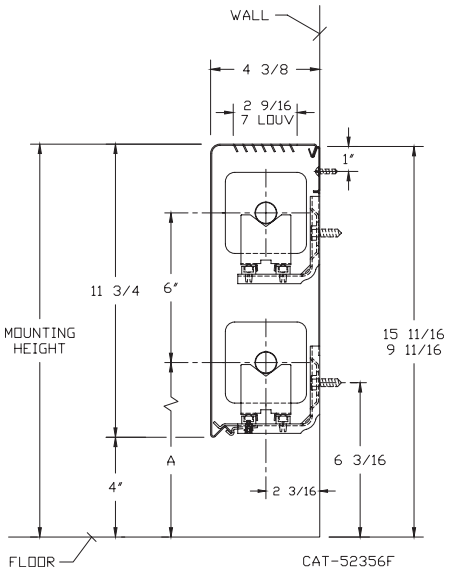

☐ JVB-E6 12

ELEMENT TUBE SIZE	FIN SIZE HEIGHT x WIDTH	CRADLE NUMBER	A
3/4 COPPER	3 5/8 x 4 1/4	2	7"
3/4 COPPER	4 1/4 x 4 1/4	3A	7 3/8
1" COPPER	3 5/8 x 4 1/4	2	7 3/16
1" COPPER	4 1/4 x 4 1/4	2	7 3/16
1 1/4 COPPER	3 5/8 x 4 1/4	2	7 5/16
1 1/4 COPPER	4 1/4 x 4 1/4	2	7 5/16
1" STEEL	4 1/4 x 4 1/4	2	7 5/16
1 1/4 STEEL	4 1/4 x 4 1/4	2	7 1/2
2" STEEL	4 1/4 x 4 1/4	1	7 1/4

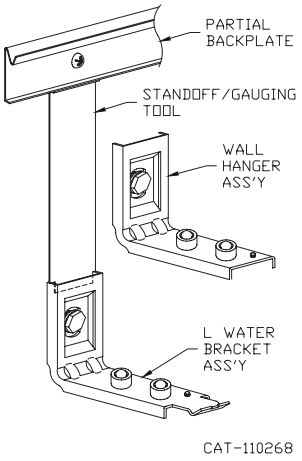

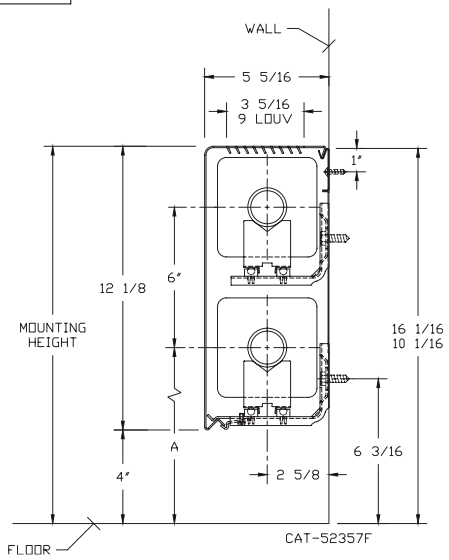

STERLING®
COMMERCIAL HYDRONIC PRODUCTS
260 North Elm St., Westfield, MA 01085
(413) 564-5535 Fax: (413) 562-8437
www.sterlingheat.com

MADE IN THE USA

10/23

PROJECT: _____ **DATE:** _____
LOCATION: _____
ARCHITECT: _____
ENGINEER: _____
CONTRACTOR: _____
PO NUMBER: _____

STYLE “JVA-E / JVB-E” VERSA-LINE

COPPER/ALUMINUM ELEMENTS

ALL RATINGS ARE IN BTU/HR/LIN FT AND BASED ON 3 FPS VELOCITY, 65° EAT

TUBE SIZE	CATALOG DESIGNATION	FIN SIZE HEIGHT X WIDTH	FINS PER FT.	FIN THICKNESS IN INCHES	ENCL DEPTH AND HEIGHT IN INCHES	TIERS AND CENTERS IN INCHES	MOUNTING HEIGHT IN INCHES	STEAM 215° FACTOR	HOT WATER (AVG.) 200°	190°	180°	170°	160°	150°	140°	130°	120°
									CORRECTION FACTORS FOR AVERAGE WATER TEMPERATURES								
								1.00	0.86	0.78	0.69	0.61	0.53	0.45	.40	.33	.26
3/4"	C3/4-33	3-1/4" SQ.	32	.020	5A	1	9-3/4	840	720	660	580	510	450	380	340	280	220
					11A	2-6 CL	15-3/4	1380	1190	1080	950	840	730	620	550	460	360
3/4"	C3/4-34	3-1/4" SQ.	40	.020	5A	1	9-3/4	970	830	760	670	590	510	440	390	320	250
					11A	2-6 CL	15-3/4	1490	1280	1160	1030	910	790	670	600	490	390
3/4"	C3/4-35	3-1/4" SQ.	50	.020	5A	1	9-3/4	980	840	760	680	600	520	440	390	320	250
					11A	2-6 CL	15-3/4	1440	1240	1120	990	880	760	650	580	480	370
1"	C33	3-1/4" SQ.	32	.020	5A	1	9-3/4	820	710	640	570	500	430	370	330	270	210
					11A	2-6 CL	15-3/4	1360	1170	1060	940	830	720	610	540	450	350
1"	C34	3-1/4" SQ.	40	.020	5A	1	9-3/4	950	820	740	660	580	500	430	380	310	250
					11A	2-6 CL	15-3/4	1470	1260	1150	1010	900	780	660	590	490	380
1"	C35	3-1/4" SQ.	50	.020	5A	1	9-3/4	960	830	750	660	590	510	430	380	320	250
					11A	2-6 CL	15-3/4	1470	1260	1150	1010	900	780	660	590	490	380
1-1/4"	C133	3-1/4" SQ.	32	.020	5A	1	9-3/4	780	670	610	540	480	410	350	310	260	200
					11A	2-6 CL	15-3/4	1320	1140	1030	910	810	700	590	530	440	340
1-1/4"	C134	3-1/4" SQ.	40	.020	5A	1	9-3/4	910	780	710	630	560	480	410	360	300	240
					11A	2-6 CL	15-3/4	1400	1200	1090	970	850	740	630	560	460	360
1-1/4"	C135	3-1/4" SQ.	50	.020	5A	1	9-3/4	920	790	720	630	560	490	410	370	300	240
					11A	2-6 CL	15-3/4	1380	1190	1080	950	840	730	620	550	460	360
3/4"	C3/4-433	3-5/8" x 4-1/4"	32	.020	6B	1	10-1/8	1080	930	840	750	660	570	490	430	360	280
					12B	1	16-1/8	1170	1010	910	810	710	620	530	470	390	300
					12B	2-6 CL	16-1/8	1900	1630	1480	1310	1160	1010	860	760	630	490
3/4"	C3/4-434	3-5/8" x 4-1/4"	40	.020	6B	1	10-1/8	1190	1020	930	820	730	630	540	480	390	310
					12B	1	16-1/8	1290	1110	1010	890	790	680	580	520	430	340
					12B	2-6 CL	16-1/8	2040	1750	1590	1410	1240	1080	920	820	670	530
3/4"	C3/4-435	3-5/8" x 4-1/4"	50	.020	6B	1	10-1/8	1270	1090	990	880	770	670	570	510	420	330
					12B	1	16-1/8	1370	1180	1070	950	840	730	620	550	450	360
					12B	2-6 CL	16-1/8	2060	1770	1610	1420	1260	1090	930	820	680	540
1"	C433	3-5/8" x 4-1/4"	32	.020	6B	1	10-1/8	1110	950	870	770	680	590	500	440	370	290
					12B	1	16-1/8	1200	1030	940	830	730	640	540	480	400	310
					12B	2-6 CL	16-1/8	1690	1450	1320	1170	1030	900	760	680	560	440
1"	C434	3-5/8" x 4-1/4"	40	.020	6B	1	10-1/8	1230	1060	960	850	750	650	550	490	410	320
					12B	1	16-1/8	1330	1140	1040	920	810	700	600	530	440	350
					12B	2-6 CL	16-1/8	1960	1690	1530	1350	1200	1040	880	780	650	510
1"	C435	3-5/8" x 4-1/4"	50	.020	6B	1	10-1/8	1320	1140	1030	910	810	700	590	530	440	340
					12B	1	16-1/8	1430	1230	1120	990	870	760	640	570	470	370
					12B	2-6 CL	16-1/8	1930	1660	1510	1330	1180	1020	870	770	640	500
1-1/4"	C1433	3-5/8" x 4-1/4"	32	.020	6B	1	10-1/8	1090	940	850	750	660	580	490	440	360	280
					12B	1	16-1/8	1180	1010	920	810	720	630	530	470	390	310
					12B	2-6 CL	16-1/8	1660	1430	1290	1150	1010	880	750	660	550	430
1-1/4"	C1434	3-5/8" x 4-1/4"	40	.020	6B	1	10-1/8	1210	1040	940	830	740	640	540	480	400	310
					12B	1	16-1/8	1310	1130	1020	900	800	690	590	520	430	340
					12B	2-6 CL	16-1/8	1920	1650	1500	1320	1170	1020	860	770	630	500
1-1/4"	C1435	3-5/8" x 4-1/4"	50	.020	6B	1	10-1/8	1300	1120	1010	900	790	690	590	520	430	340
					12B	1	16-1/8	1400	1200	1090	970	850	740	630	560	460	360
					12B	2-6 CL	16-1/8	1890	1630	1470	1300	1150	1000	850	760	620	490
3/4"	C3/4-43	4-1/4" SQ.	32	.020	6B	1	10-1/8	1200	1030	940	830	730	640	540	480	400	310
					12B	1	16-1/8	1210	1040	940	830	740	640	540	480	400	310
					12B	2-6 CL	16-1/8	2090	1800	1630	1440	1270	1110	940	840	690	540
3/4"	C3/4-44	4-1/4" SQ.	40	.020	6B	1	10-1/8	1310	1130	1020	900	800	690	590	520	430	340
					12B	1	16-1/8	1420	1220	1110	980	870	750	640	570	470	370
					12B	2-6 CL	16-1/8	2100	1810	1640	1450	1280	1110	950	840	690	550
3/4"	C3/4-45	4-1/4" SQ.	50	.020	6B	1	10-1/8	1330	1140	1040	920	810	700	600	530	440	350
					12B	1	16-1/8	1440	1240	1120	990	880	760	650	580	480	370
					12B	2-6 CL	16-1/8	2110	1810	1650	1460	1290	1120	950	840	700	550
1"	C43	4-1/4" SQ.	32	.020	6B	1	10-1/8	1220	1050	950	840	740	650	550	490	400	320
					12B	1	16-1/8	1320	1140	1030	910	810	700	590	530	440	340
					12B	2-6 CL	16-1/8	1920	1650	1500	1320	1170	1020	860	770	630	500
1"	C44	4-1/4" SQ.	40	.020	6B	1	10-1/8	1220	1050	950	840	740	650	550	490	400	320
					12B	1	16-1/8	1320	1140	1030	910	810	700	590	530	440	340
					12B	2-6 CL	16-1/8	2040	1750	1590	1410	1240	1080	920	820	670	530
1"	C45	4-1/4" SQ.	50	.020	6B	1	10-1/8	1370	1180	1070	950	840	730	620	550	450	360
					12B	1	16-1/8	1480	1270	1150	1020	900	780	670	590	490	380
					12B	2-6 CL	16-1/8	1930	1660	1510	1330	1180	1020	870	770	640	500
1-1/4"	C143	4-1/4" SQ.	32	.020	6B	1	10-1/8	1200	1030	940	830	730	640	540	480	400	310
					12B	1	16-1/8	1300	1120	1010	900	790	690	590	520	430	340
					12B	2-6 CL	16-1/8	1880	1620	1470	1300	1150	1000	850	750	620	490
1-1/4"	C144	4-1/4" SQ.	40	.020	6B	1	10-1/8	1330	1140	1040	920	810	700	600	530	440	350
					12B	1	16-1/8	1440	1240	1120	990	880	760	650	580	480	370
					12B	2-6 CL	16-1/8	1970	1690	1540	1360	1200	1040	890	790	650	510
1-1/4"	C145	4-1/4" SQ.	50	.020	6B	1	10-1/8	1350	1160	1050	930	820	720	610	540	450	350
					12B	1	16-1/8	1460	1260	1140	1010	890	770	660	580	480	380
					12B	2-6 CL	16-1/8	1890	1630	1470	1300	1150	1000	850	760	620	490

Note: Copper tube furnished flared one end standard.

STYLE “JVA-E / JVB-E” VERSA-LINE

STEEL ELEMENTS

ALL RATINGS ARE IN BTU/HR/LIN FT AND BASED ON 3 FPS VELOCITY, 65° EAT

TUBE SIZE	CATALOG DESIGNATION	FIN SIZE HEIGHT X WIDTH	FINS PER FT.	FIN THICKNESS IN INCHES	ENCL DEPTH AND HEIGHT IN INCHES	TIERS AND CENTERS IN INCHES	MOUNTING HEIGHT IN INCHES	STEAM 215° FACTOR	HOT WATER (AVG.) 200°	190°	180°	170°	160°	150°	140°	130°	120°
									CORRECTION FACTORS FOR AVERAGE WATER TEMPERATURES								
								1.00	0.86	0.78	0.69	0.61	0.53	0.45	.40	.33	.26
1"	S33	3-1/4" SQ.	32	.032	5A	1	9-3/4	780	670	610	540	480	410	350	310	260	200
					11A	2-6 CL	15-3/4	1330	1140	1040	920	810	700	600	530	440	350
1"	S34	3-1/4" SQ.	40	.032	5A	1	9-3/4	860	740	670	590	520	460	390	340	280	220
					11A	2-6 CL	15-3/4	1475	1270	1150	1020	900	780	660	590	490	380
1"	S35	3-1/4" SQ.	50	.032	5A	1	9-3/4	910	780	710	630	560	480	410	360	300	240
					11A	2-6 CL	15-3/4	1550	1330	1210	1070	950	820	700	620	510	400
1-1/4"	S133	3-1/4" SQ.	32	.032	5A	1	9-3/4	770	660	600	530	470	410	350	310	250	200
					11A	2-6 CL	15-3/4	1320	1140	1030	910	810	700	590	530	440	340
1-1/4"	S134	3-1/4" SQ.	40	.032	5A	1	9-3/4	870	750	680	600	530	460	390	350	290	230
					11A	2-6 CL	15-3/4	1490	1280	1160	1030	910	790	670	600	490	390
1-1/4"	S135	3-1/4" SQ.	50	.032	5A	1	9-3/4	880	760	690	610	540	470	400	350	290	230
					11A	2-6 CL	15-3/4	1510	1300	1180	1040	920	800	680	600	500	390
1"	S43	4-1/4" SQ.	32	.032	6B	1	10-1/8	1095	940	850	760	670	580	490	440	360	280
					12B	1	16-1/8	1180	1010	920	810	720	630	530	470	390	310
					12B	2-6 CL	16-1/8	1850	1590	1440	1280	1130	980	830	740	610	480
1"	S44	4-1/4" SQ.	40	.032	6B	1	10-1/8	1215	1040	950	840	740	640	550	490	400	320
					12B	1	16-1/8	1320	1140	1030	910	810	700	590	530	440	340
					12B	2-6 CL	16-1/8	1910	1640	1490	1320	1170	1010	860	760	630	500
1"	S45	4-1/4" SQ.	50	.032	6B	1	10-1/8	1300	1120	1010	900	790	690	590	520	430	340
					12B	1	16-1/8	1410	1210	1100	970	860	750	630	560	470	370
					12B	2-6 CL	16-1/8	2150	1850	1680	1480	1310	1140	970	860	710	560
1-1/4"	S143	4-1/4" SQ.	32	.032	6B	1	10-1/8	1010	870	790	700	620	540	450	400	330	260
					12B	1	16-1/8	1090	940	850	750	660	580	490	440	360	280
					12B	2-6 CL	16-1/8	1700	1460	1330	1170	1040	900	770	680	560	440
1-1/4"	S144	4-1/4" SQ.	40	.032	6B	1	10-1/8	1210	1040	940	830	740	640	540	480	400	310
					12B	1	16-1/8	1310	1130	1020	900	800	690	590	520	430	340
					12B	2-6 CL	16-1/8	1900	1630	1480	1310	1160	1010	860	760	630	490
1-1/4"	S145	4-1/4" SQ.	50	.032	6B	1	10-1/8	1280	1100	1000	880	780	680	580	510	420	330
					12B	1	16-1/8	1380	1190	1080	950	840	730	620	550	460	360
					12B	2-6 CL	16-1/8	2135	1840	1670	1470	1300	1130	960	850	700	560
2"	S242	4-1/4" SQ.	25	.032	6B	1	10-1/8	950	820	740	660	580	500	430	380	310	250
					12B	1	16-1/8	1030	890	800	710	630	550	460	410	340	270
					12B	2-6 CL	16-1/8	1620	1390	1260	1120	990	860	730	650	530	420
2"	S243	4-1/4" SQ.	32	.032	6B	1	10-1/8	1130	970	880	780	690	600	510	450	370	290
					12B	1	16-1/8	1220	1050	950	840	740	650	550	490	400	320
					12B	2-6 CL	16-1/8	1770	1520	1380	1220	1080	940	800	710	580	460

Notes: 1) Steel fins furnished as .032 thick, painted black.
2) NPT threads furnished on steel elements. Please use domestic fittings for proper installation.
3) The ends can be provided chamfered for field welded fittings when specified.

STYLE E ACCESSORIES

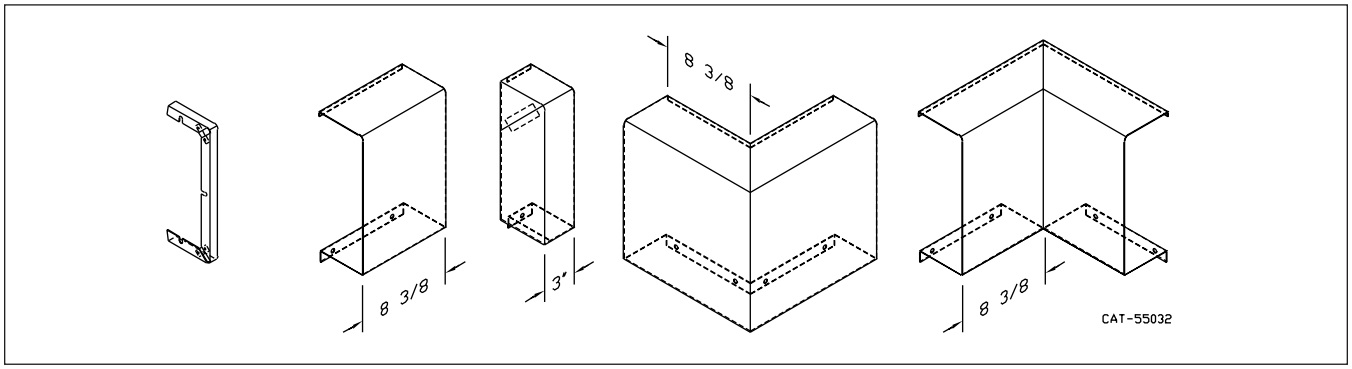

Design Data

COMMERCIAL FINNED TUBE CHARTS FOR RATING CORRECTIONS

For assistance with ratings and selection, please use our online Specifier.

CORRECTION FACTORS FOR WATER TEMPERATURES AND AIR TEMPERATURES OTHER THAN STANDARD

AVERAGE WATER TEMP. °F	ENTERING AIR TEMPERATURE °F														
	45	55	STD 65	70	75	80	85	90	95	100	110	120	130	140	150
90	.19	.13	.11	.06											
100	.25	.19	.15	.11	.08	.06									
110	.31	.25	.20	.16	.13	.11	.08	.06							
120	.38	.31	.26	.21	.19	.16	.13	.11	.08	.06					
130	.45	.38	.33	.28	.25	.21	.19	.16	.13	.11	.06				
140	.53	.45	.40	.34	.31	.28	.25	.21	.19	.16	.11	.06			
150	.61	.53	.45	.41	.38	.34	.31	.28	.25	.21	.16	.11	.06		
160	.69	.61	.53	.49	.45	.41	.38	.34	.31	.28	.21	.16	.11	.06	
170	.77	.69	.61	.57	.53	.49	.45	.41	.38	.34	.28	.21	.16	.11	.06
180	.86	.77	.69	.65	.61	.57	.53	.49	.45	.41	.34	.28	.21	.16	.11
190	.95	.86	.78	.73	.69	.65	.61	.57	.53	.49	.41	.34	.28	.21	.16
200	1.05	.95	.86	.82	.77	.73	.69	.65	.61	.57	.49	.41	.34	.28	.21
210	1.14	1.05	.95	.91	.86	.82	.77	.73	.69	.65	.57	.49	.41	.34	.28
▶ 215 (STD.)	1.19	1.09	1.00	.95	.91	.86	.82	.77	.73	.69	.61	.53	.45	.38	.31
220	1.24	1.14	1.05	1.00	.95	.91	.86	.82	.77	.73	.65	.57	.49	.41	.34
230	1.34	1.24	1.14	1.09	1.05	1.00	.95	.91	.86	.82	.73	.65	.57	.49	.41
240	1.44	1.34	1.25	1.19	1.14	1.09	1.05	1.00	.95	.91	.82	.73	.65	.57	.49
250	1.55	1.44	1.34	1.29	1.24	1.19	1.14	1.09	1.05	1.00	.91	.82	.73	.65	.57
260	1.66	1.55	1.44	1.39	1.34	1.29	1.24	1.19	1.14	1.09	1.00	.91	.82	.73	.65
270	1.76	1.66	1.55	1.50	1.44	1.39	1.34	1.29	1.24	1.19	1.09	1.00	.91	.82	.73
280	1.87	1.76	1.66	1.60	1.55	1.50	1.44	1.39	1.34	1.29	1.19	1.09	1.00	.91	.82
290	1.99	1.87	1.76	1.71	1.66	1.60	1.55	1.50	1.44	1.39	1.29	1.19	1.09	1.00	.91
300	2.10	1.99	1.87	1.82	1.76	1.71	1.66	1.60	1.55	1.50	1.39	1.29	1.19	1.09	1.00

CORRECTION FACTORS FOR STEAM PRESSURES AND AIR TEMPERATURES OTHER THAN STANDARD

STEAM PRESSURE		ENTERING AIR TEMPERATURE °F														
GAUGE	ABS. PSI	TEMP. °F	45	55	STD 65	70	75	80	85	90	100	110	120	130	140	150
(VAC) 15" HG	7.32	178.9	0.90	0.80	0.70	0.65	0.60	0.56	0.51	0.45	0.39	0.32	0.25	0.18	0.13	0.08
(VAC) 10"	9.78	192.2	1.02	0.91	0.81	0.76	0.71	0.66	0.62	0.55	0.48	0.40	0.33	0.26	0.20	0.14
(VAC) 5"	12.25	202.9	1.11	1.00	0.90	0.85	0.79	0.75	0.70	0.63	0.56	0.48	0.40	0.33	0.27	0.20
0 PSI	14.696	212.0	1.19	1.09	0.97	0.92	0.87	0.82	0.77	0.70	0.63	0.54	0.46	0.38	0.31	0.25
▶ .899	15.595	215.0	1.22	1.11	1.00	0.95	0.90	0.84	0.80	0.75	0.65	0.57	0.48	0.40	0.33	0.26
5	19.70	227.1	1.34	1.22	1.11	1.05	1.00	0.95	0.90	0.81	0.75	0.66	0.57	0.49	0.41	0.34
10	24.70	239.4	1.45	1.33	1.22	1.17	1.11	1.05	1.00	0.91	0.85	0.75	0.66	0.58	0.50	0.42
15	29.70	249.8	1.55	1.43	1.31	1.26	1.20	1.14	1.09	1.00	0.94	0.84	0.75	0.66	0.57	0.49
20	34.70	258.5	1.63	1.52	1.40	1.33	1.28	1.23	1.17	1.07	1.02	0.92	0.82	0.73	0.64	0.55
25	39.70	266.8	1.71	1.59	1.47	1.41	1.36	1.30	1.25	1.15	1.09	0.98	0.89	0.80	0.71	0.62
30	44.70	274.0	1.78	1.66	1.54	1.48	1.42	1.37	1.31	1.21	1.15	1.05	0.95	0.85	0.76	0.68
40	54.70	286.7	1.91	1.79	1.66	1.61	1.54	1.49	1.43	1.32	1.27	1.16	1.06	0.97	0.87	0.78
50	64.70	297.7	2.02	1.90	1.77	1.71	1.65	1.60	1.54	1.42	1.37	1.26	1.16	1.06	0.96	0.87
60	74.70	307.3	2.10	2.00	1.87	1.81	1.75	1.69	1.63	1.51	1.47	1.35	1.25	1.15	1.05	0.95
70	84.70	316.0	2.20	2.09	1.95	1.89	1.83	1.77	1.71	1.59	1.55	1.44	1.33	1.23	1.12	1.03
80	94.70	323.9	2.27	2.17	2.03	1.97	1.91	1.85	1.80	1.69	1.63	1.52	1.41	1.31	1.20	1.10
90	104.70	331.2	2.36	2.24	2.11	2.05	1.98	1.93	1.87	1.74	1.70	1.59	1.48	1.38	1.28	1.17
100	114.70	337.9	2.43	2.31	2.18	2.11	2.05	2.00	1.94	1.81	1.77	1.65	1.54	1.44	1.33	1.23
125	139.70	352.9	2.59	2.47	2.33	2.27	2.21	2.16	2.10	1.96	1.92	1.80	1.69	1.59	1.48	1.38
150	164.70	365.9	2.73	2.62	2.47	2.43	2.35	2.29	2.23	2.08	2.05	1.94	1.82	1.72	1.61	1.51
175	189.70	377.4	2.86	2.74	2.60	2.54	2.47	2.41	2.35	2.21	2.17	2.05	1.95	1.85	1.73	1.63
200	214.70	387.8	2.95	2.85	2.71	2.63	2.58	2.52	2.47	2.31	2.29	2.17	2.06	1.96	1.84	1.75

From Keenan and Keyes — Linear Interpolation. NOTE: Gauge pressure should be corrected for altitude.

Rate of pitch for steam ½"drop over 20-foot run.

Design Data

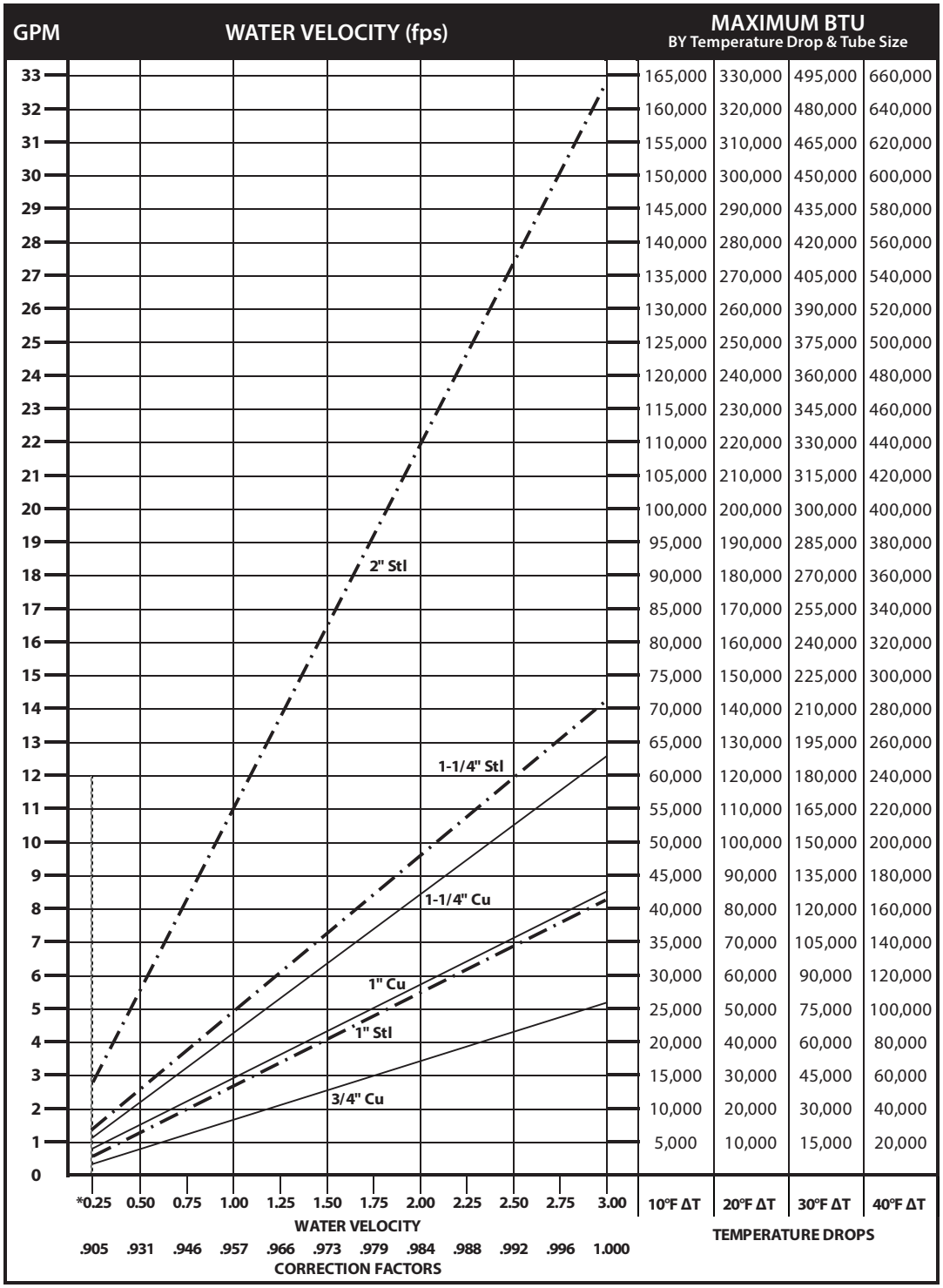

GPM	10°F ΔT	20°F ΔT	30°F ΔT	40°F ΔT
33	165,000	330,000	495,000	660,000
32	160,000	320,000	480,000	640,000
31	155,000	310,000	465,000	620,000
30	150,000	300,000	450,000	600,000
29	145,000	290,000	435,000	580,000
28	140,000	280,000	420,000	560,000
27	135,000	270,000	405,000	540,000
26	130,000	260,000	390,000	520,000
25	125,000	250,000	375,000	500,000
24	120,000	240,000	360,000	480,000
23	115,000	230,000	345,000	460,000
22	110,000	220,000	330,000	440,000
21	105,000	210,000	315,000	420,000
20	100,000	200,000	300,000	400,000
19	95,000	190,000	285,000	380,000
18	90,000	180,000	270,000	360,000
17	85,000	170,000	255,000	340,000
16	80,000	160,000	240,000	320,000
15	75,000	150,000	225,000	300,000
14	70,000	140,000	210,000	280,000
13	65,000	130,000	195,000	260,000
12	60,000	120,000	180,000	240,000
11	55,000	110,000	165,000	220,000
10	50,000	100,000	150,000	200,000
9	45,000	90,000	135,000	180,000
8	40,000	80,000	120,000	160,000
7	35,000	70,000	105,000	140,000
6	30,000	60,000	90,000	120,000
5	25,000	50,000	75,000	100,000
4	20,000	40,000	60,000	80,000
3	15,000	30,000	45,000	60,000
2	10,000	20,000	30,000	40,000
1	5,000	10,000	15,000	20,000
0				

*Do not design below .25 fps.

DYNAMIC FORMULAS

$$BTU = GPM \times 500 \times TD$$

$$GPM = \left(\frac{BTU}{500}\right) \div TD$$

$$TD = \left(\frac{BTU}{500}\right) \div GPM$$

Pressure Drop at Given Water Velocities (Feet of Water per 100 ft. of pipe) based on Hazen - Williams calculation

Nominal Pipe Size	Water Velocity (ft/sec)											
	0.25	0.50	0.75	1.00	1.25	1.50	1.75	2.00	2.25	2.50	2.75	3.00
3/4" Copper	0.06	0.20	0.42	0.72	1.09	1.53	2.04	2.61	3.25	3.95	4.71	5.53
1" Copper	0.04	0.15	0.32	0.54	0.81	1.14	1.52	1.94	2.42	2.94	3.50	4.11
1 1/4" Copper	0.03	0.12	0.25	0.43	0.64	0.90	1.20	1.54	1.92	2.33	2.78	3.26
1" Steel	0.04	0.15	0.32	0.54	0.81	1.14	1.52	1.95	2.42	2.94	3.51	4.12
1 1/4" Steel	0.03	0.11	0.23	0.40	0.60	0.84	1.12	1.44	1.79	2.17	2.59	3.05
2" Steel	0.02	0.07	0.14	0.25	0.37	0.52	0.69	0.89	1.10	1.34	1.60	1.88

Design Data

GUARANTEED WORKING PRESSURES

1" IPS — 780 at Temperatures up to 650˚F.
1-1/4" IPS — 660 at Temperatures up to 650˚F.
2" IPS — 405 at Temperatures up to 650˚F.
1-1/4" CU — 194 at Temperatures up to 300˚F.
1" CU 204 at Temperatures up to 300˚F.
3/4" CU 218 PSI at Temperatures up to 300˚F.

MAXIMUM PRESSURES AT OTHER TEMPERATURES ARE AVAILABLE UPON REQUEST.

Pipe Water Capacities and Quantities Circulated at Velocity of 3 Feet Per Second

Nominal Pipe Size	Pipe I.D. (inches)	Gals Per Lin. Ft.	GPM @ 3' per sec Velocity
3/4" Copper	0.835	0.028	5.12
1" Copper	1.077	0.047	8.52
1 1/4" Copper	1.315	0.071	12.70
1" Steel	1.075	0.047	8.49
1 1/4" Steel	1.395	0.079	14.29
2" Steel	2.115	0.183	32.85

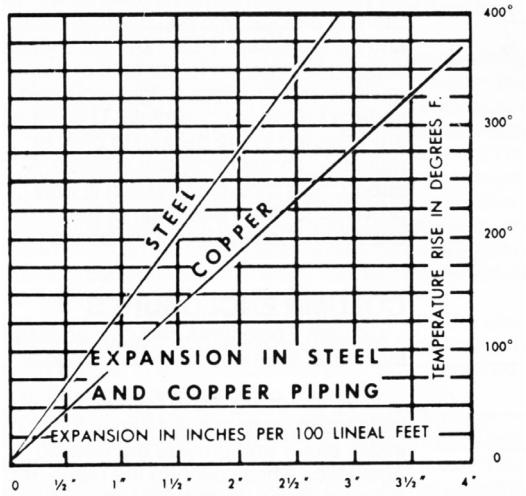

Glycol Correction Factors

Fluid Temperature 200°F

% Solution	Ethylene Glycol	Propylene Glycol
20	.952	.988
30	.921	.968
40	.888	.943
50	.852	.912

Fluid Temperature 180°F

% Solution	Ethylene Glycol	Propylene Glycol
20	.946	.982
30	.913	.961
40	.879	.934
50	.842	.902

Fluid Temperature 140°F

% Solution	Ethylene Glycol	Propylene Glycol
20	.934	.97
30	.898	.946
40	.861	.916
50	.821	.881

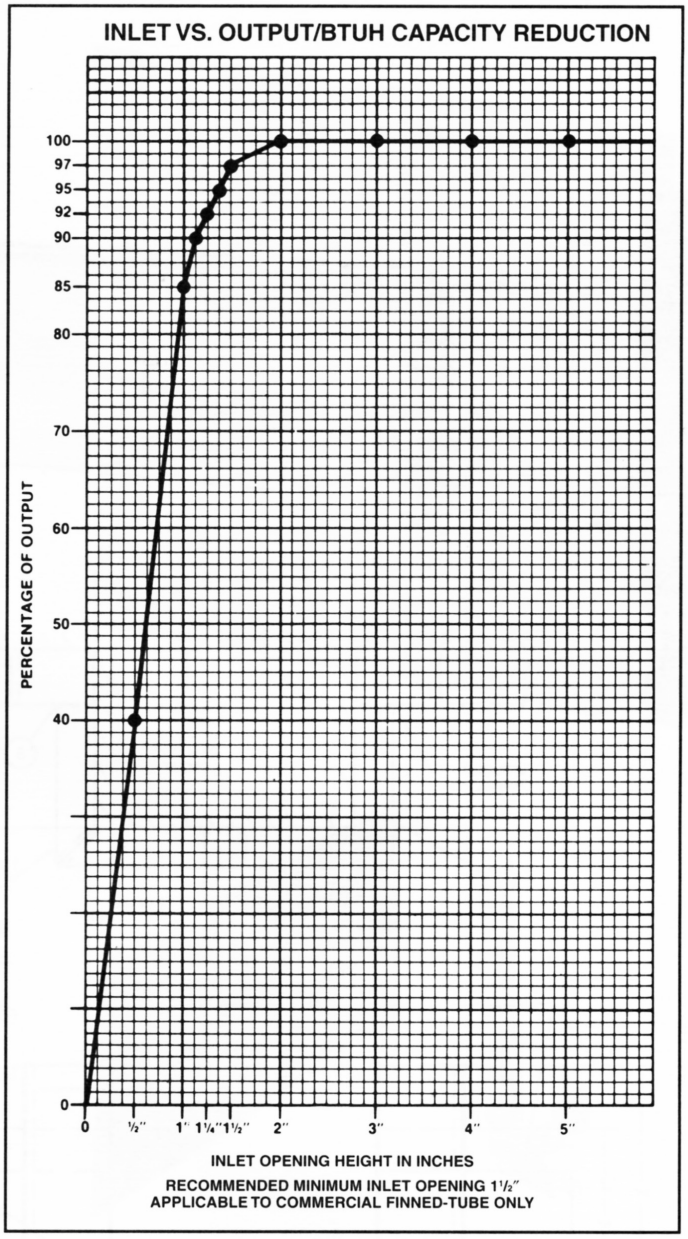

ALTITUDE FACTORS

Approximate factors for convective heat value at varying altitudes

Altitude	Ferrous Units	Copper Alum. Units
Sea Level	1.000	1,000
1,000 ft.	.984	.969
2,000 ft.	.968	.938
3,000 ft.	.952	.908
4,000 ft.	.936	.878
5,000 ft.	.920	.850
6,000 ft.	.904	.822
7,000 ft.	.889	.795
8,000 ft.	.874	.768
9,000 ft.	.859	.743
10,000 ft.	.844	.718
15,000 ft.	.771	.603
20,000 ft.	.703	.502